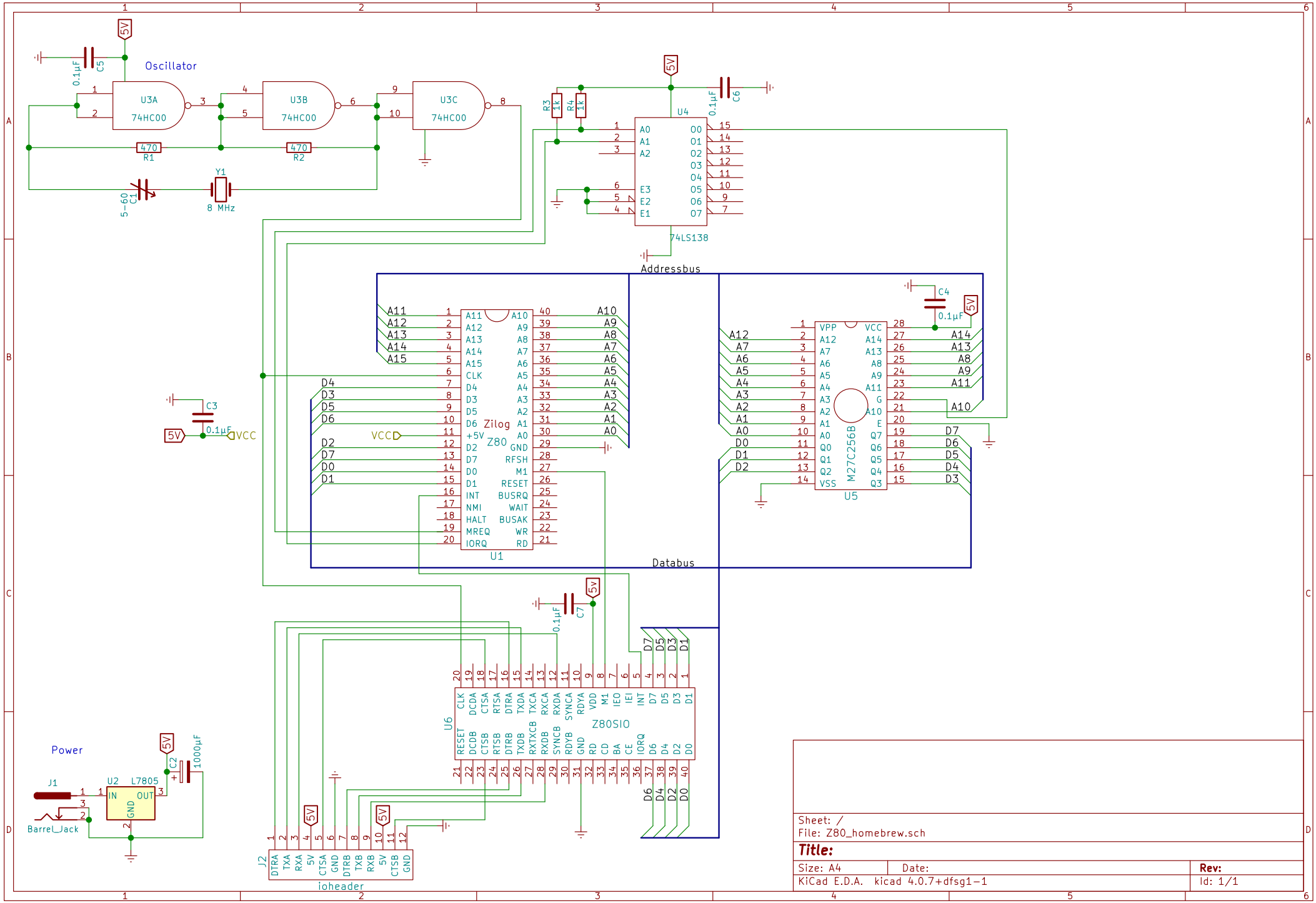

Sheet: /
File: Z80_homebrew.sch

Title:

Size: A4	Date:	Rev:
KiCad E.D.A. kicad 4.0.7+dfsg1-1		Id: 1/1